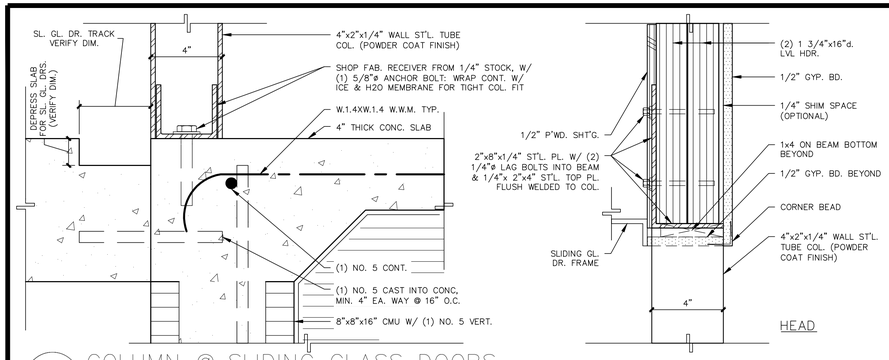

8 COLUMN @ SLIDING GLASS DOORS

3" = 1'-0"

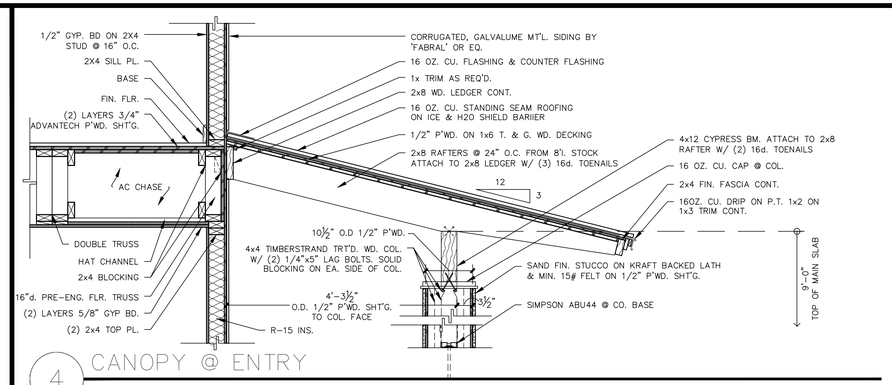

4 CANOPY @ ENTRY

3/4" = 1'-0"

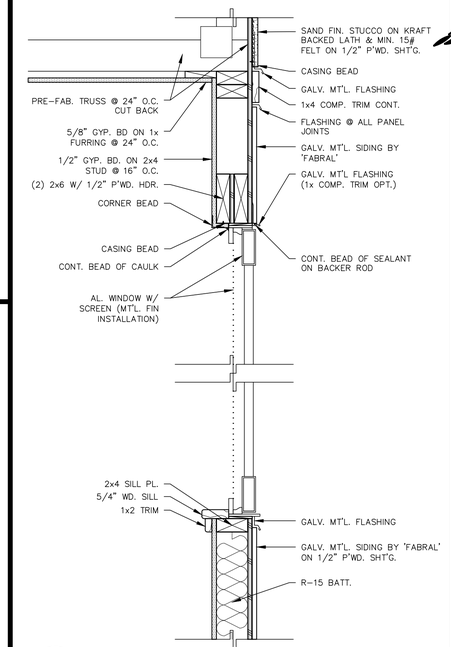

2 WINDOW SECTION

1-1/2" = 1'-0"

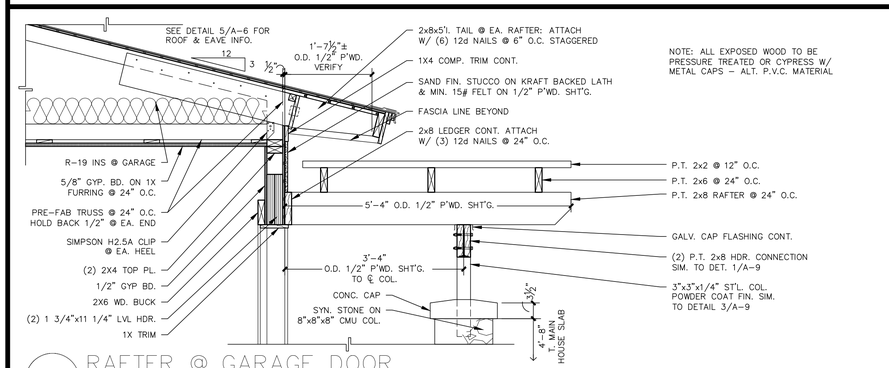

7 RAFTER @ GARAGE DOOR

3/4" = 1'-0"

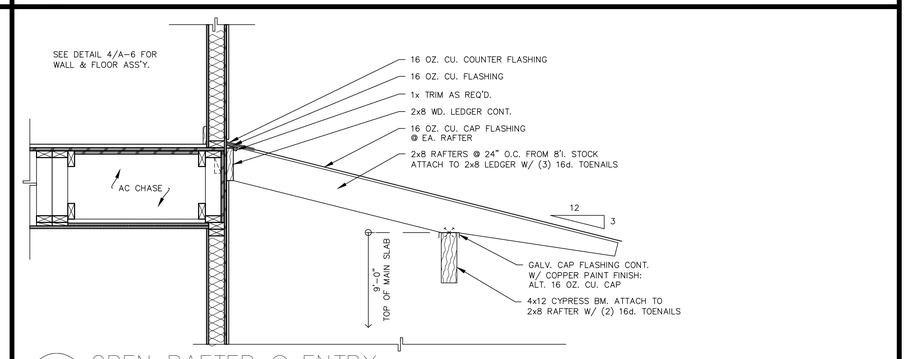

3 OPEN RAFTER @ ENTRY

3/4" = 1'-0"

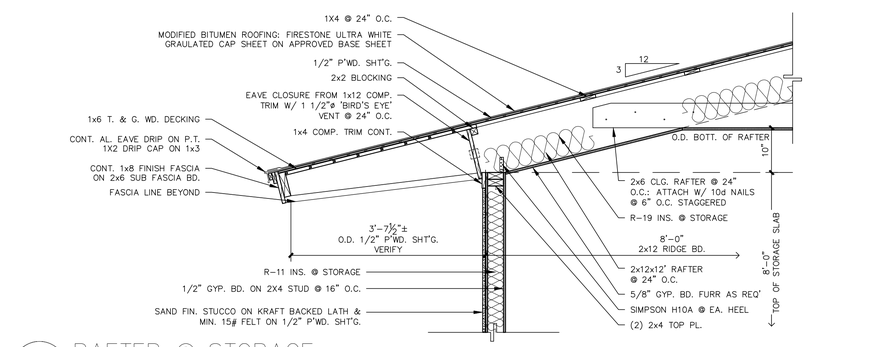

6 RAFTER @ STORAGE

3/4" = 1'-0"

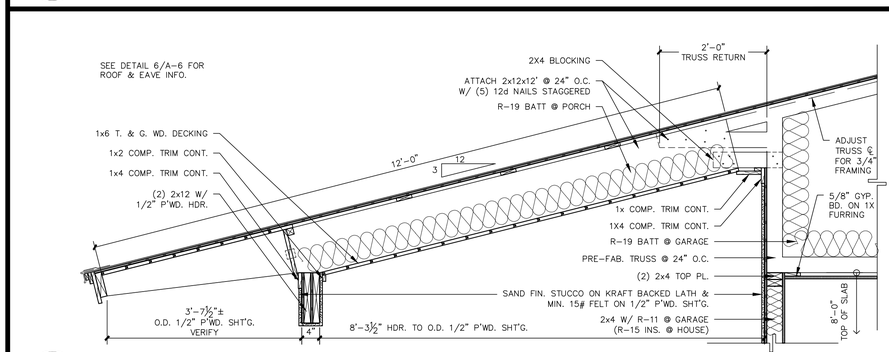

5 RAFTER @ SUMMER KITCHEN

3/4" = 1'-0"

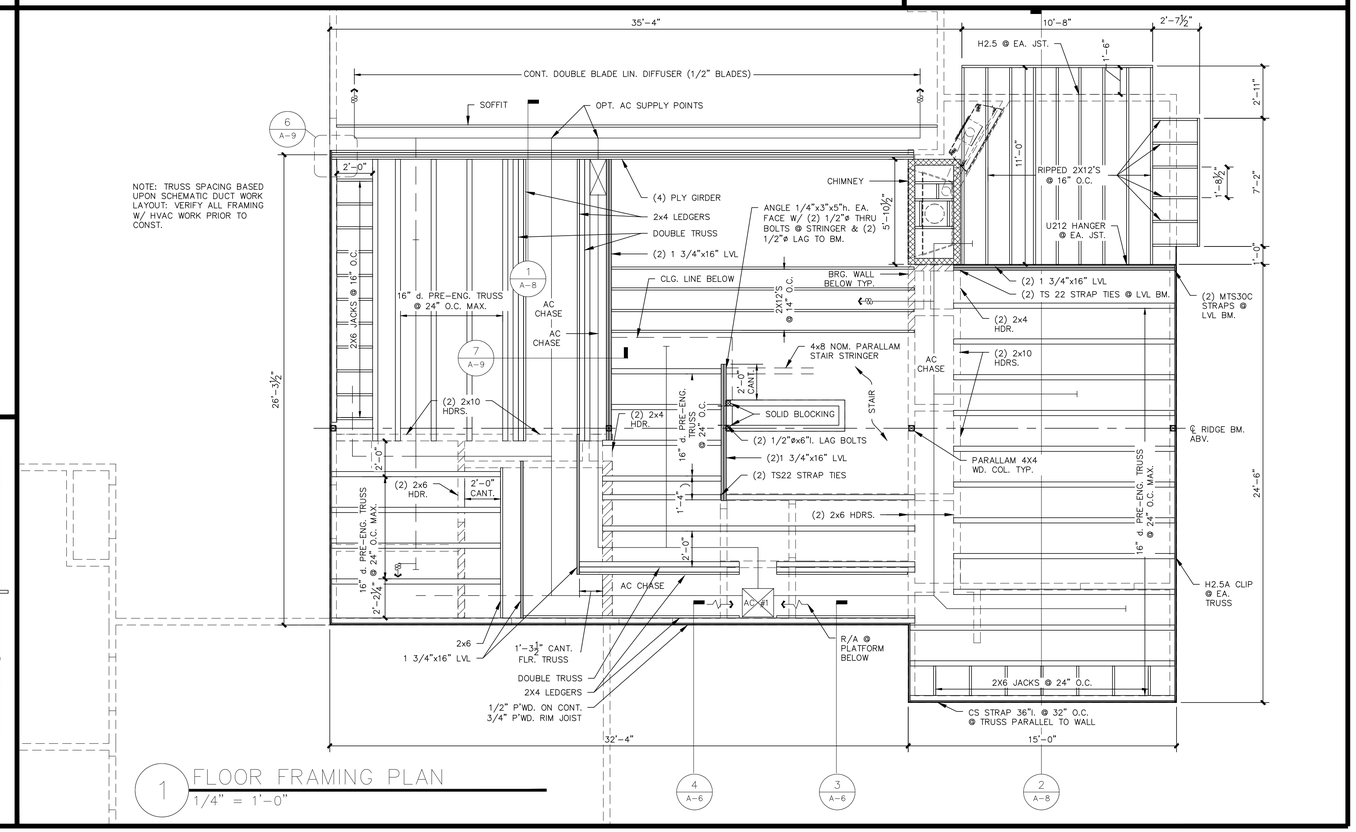

1 FLOOR FRAMING PLAN

1/4" = 1'-0"

Shibui Studios INC.

821 S.E. 16TH PLACE
OCALA, FLORIDA 34471
TEL. 352-368-3776
DATE: 5/1/2012

A NEW RESIDENCE FOR :

The Stockman Family

Lake Weir, Marion County, Florida

SHEET

A-6

OF A-11

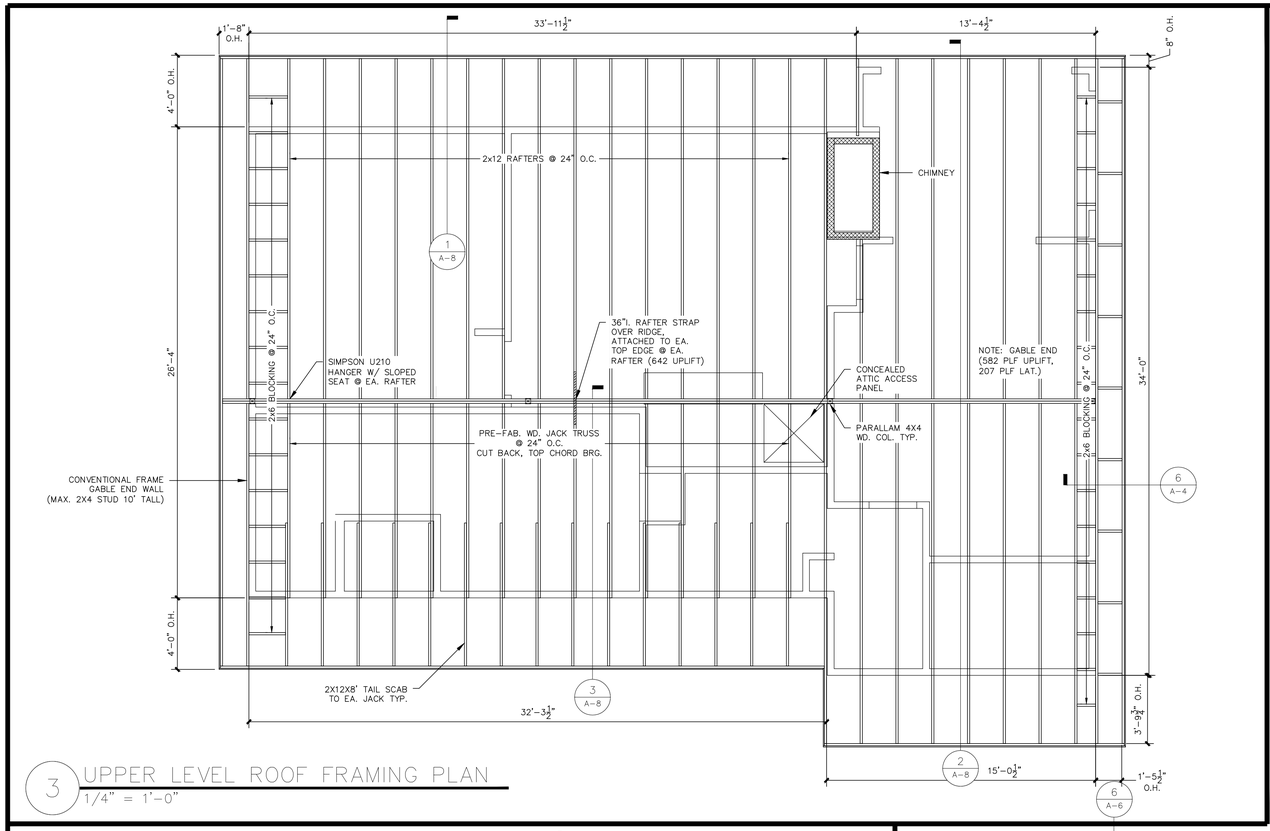

3 UPPER LEVEL ROOF FRAMING PLAN
1/4" = 1'-0"

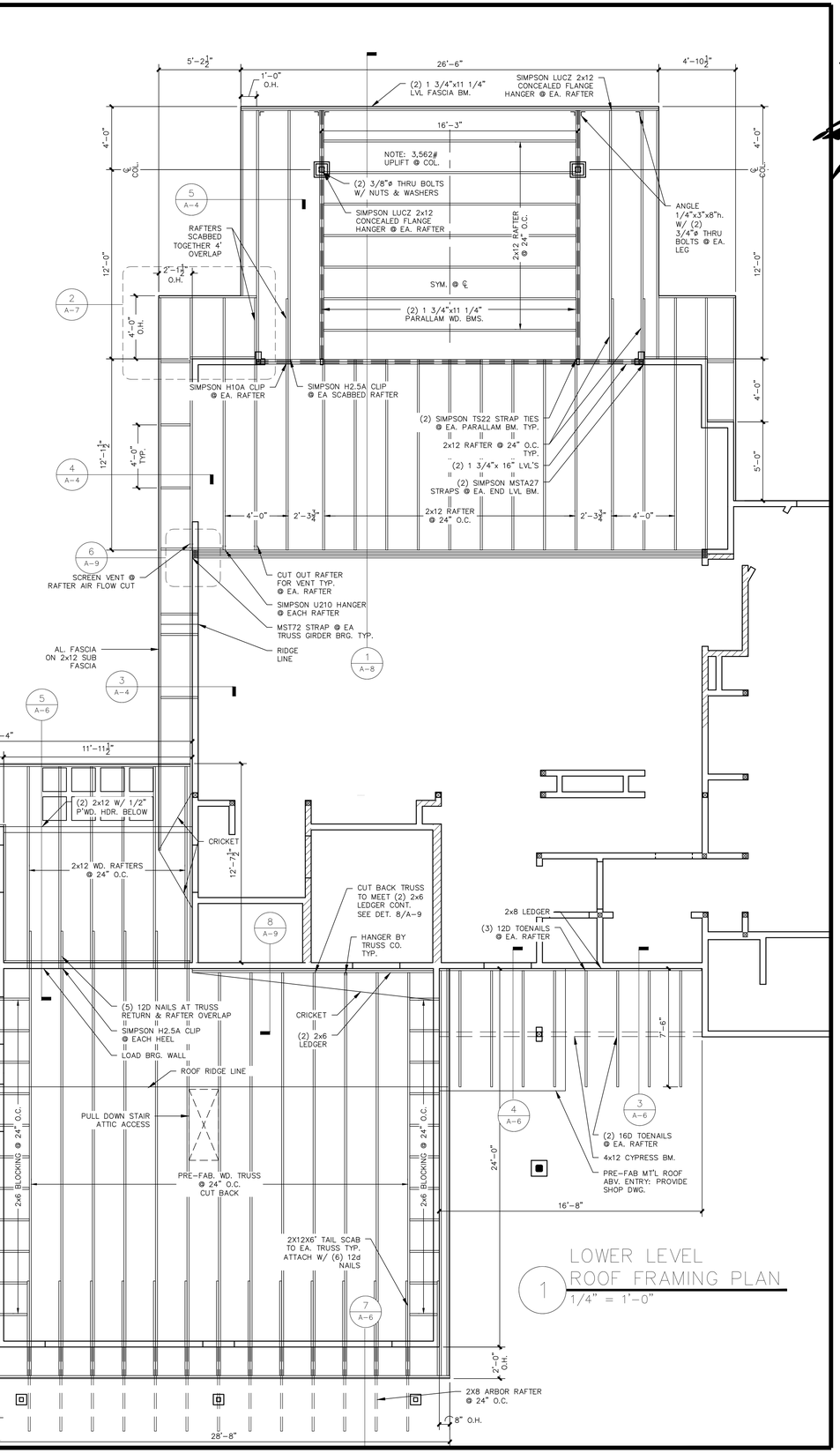

1 LOWER LEVEL ROOF FRAMING PLAN
1/4" = 1'-0"

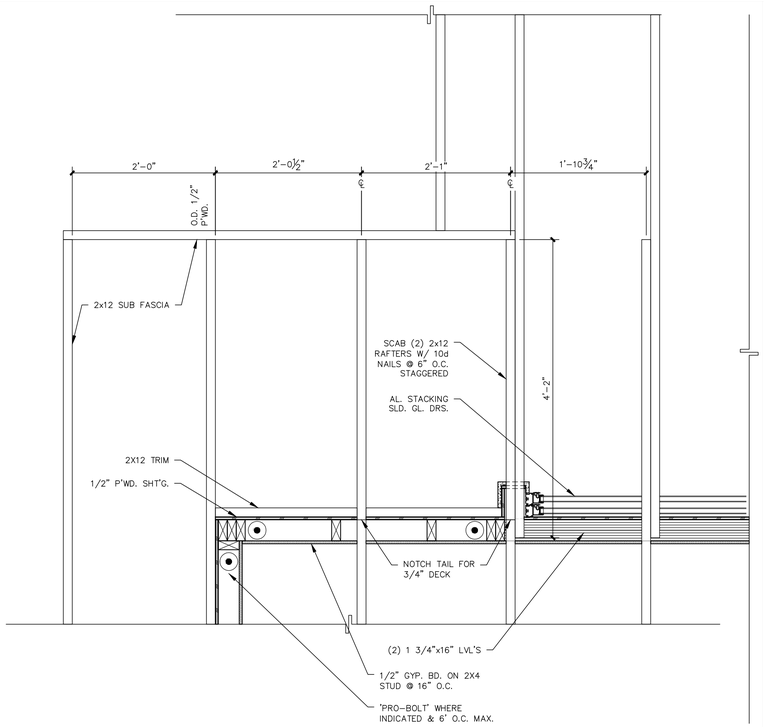

2 PATIO ROOF DETAIL
1" = 1'-0"

Shibui Studios INC.
821 S.E. 16TH PLACE
OCALA, FLORIDA 34471
TEL. 352-368-3776

DATE: 5/1/2012

A NEW RESIDENCE FOR :
The Stockman Family
Lake Weir, Marion County, Florida

SHEET
A-7
OF A-11

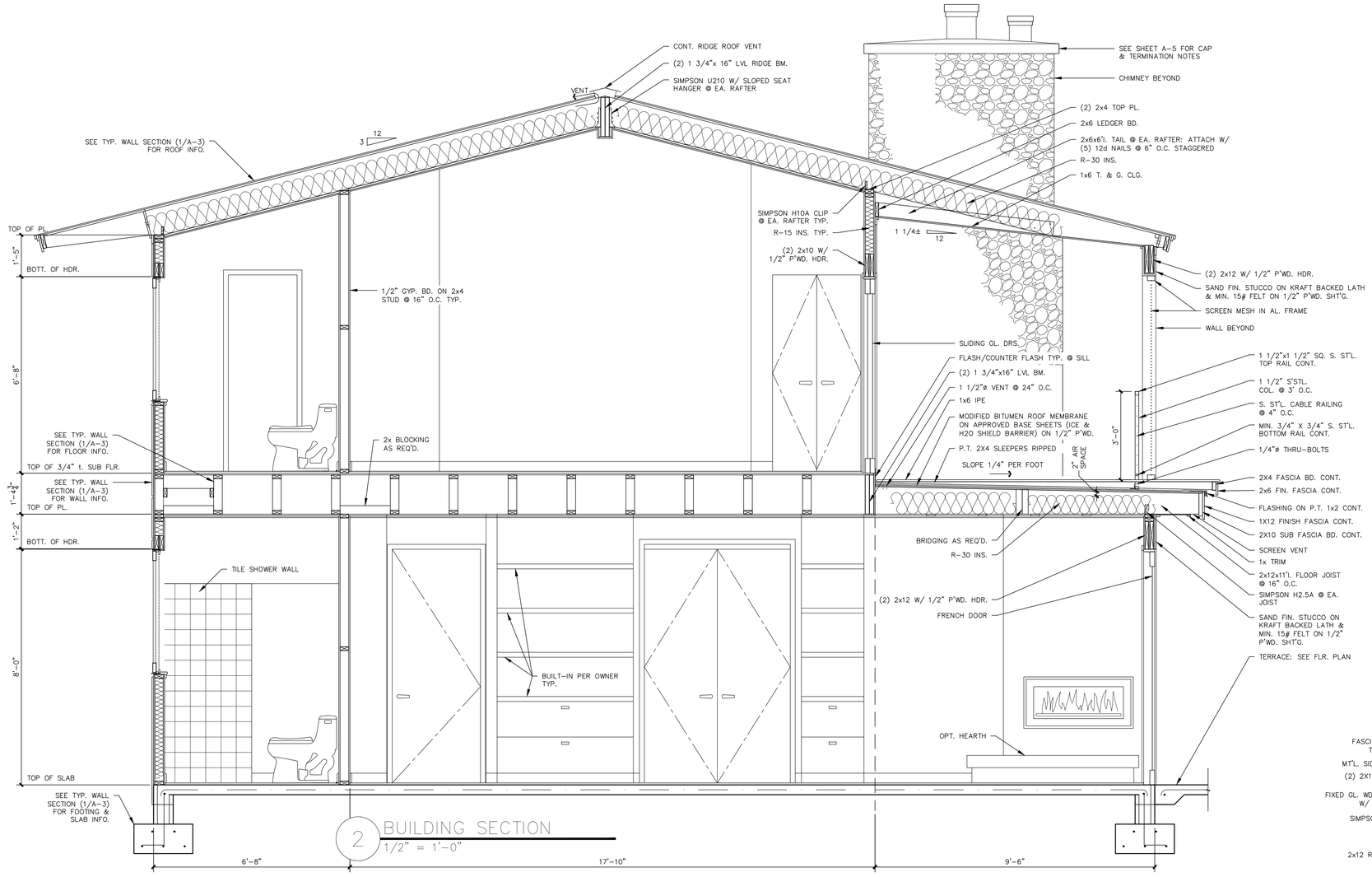

2 BUILDING SECTION
1/2" = 1'-0"

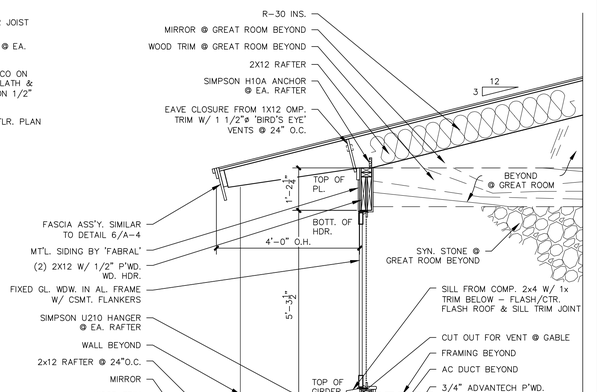

1 BUILDING SECTION
1/2" = 1'-0"

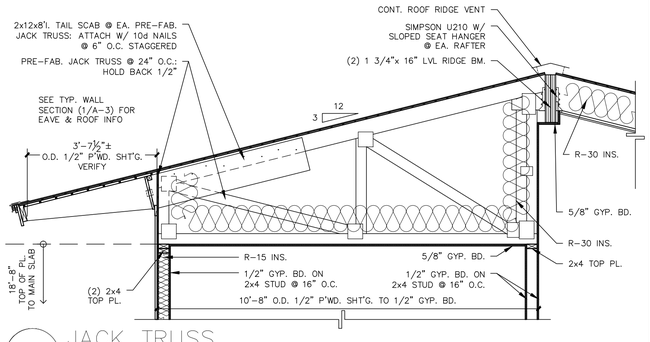

3 JACK TRUSS
1/2" = 1'-0"

Shibui Studios INC.
821 S.E. 16TH PLACE
OCALA, FLORIDA 34471
TEL. 352-368-3776

DATE: 5/1/2012

A NEW RESIDENCE FOR :
The Stockman Family
Lake Weir, Marion County, Florida

SHEET
A-8
OF A-11

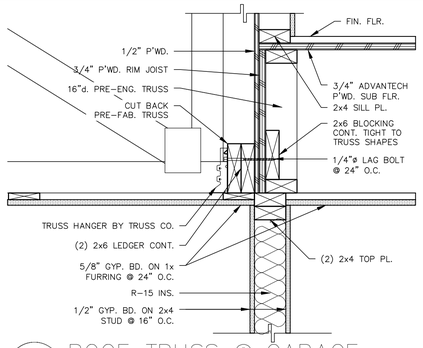

8 ROOF TRUSS @ GARAGE

1-1/2" = 1'-0"

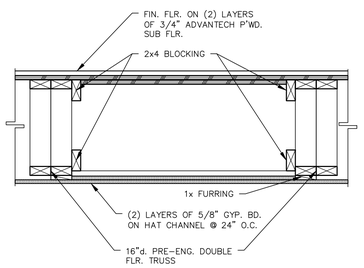

7 AC CHASE

1" = 1'-0"

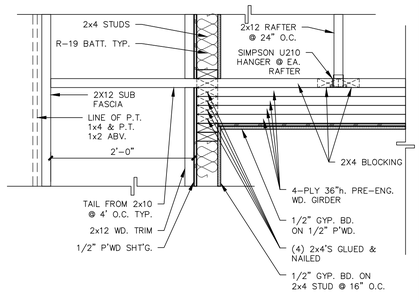

6 4-PLY GIRDER DETAIL

1" = 1'-0"

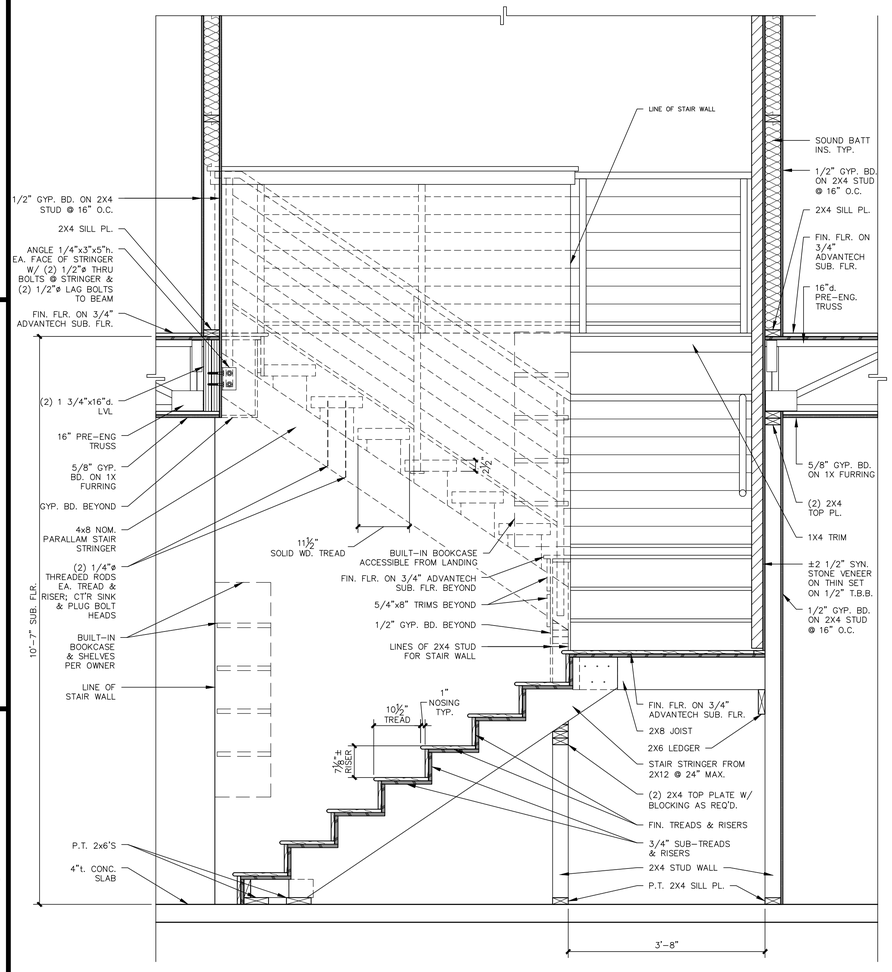

4 STAIR SECTION

3/4" = 1'-0"

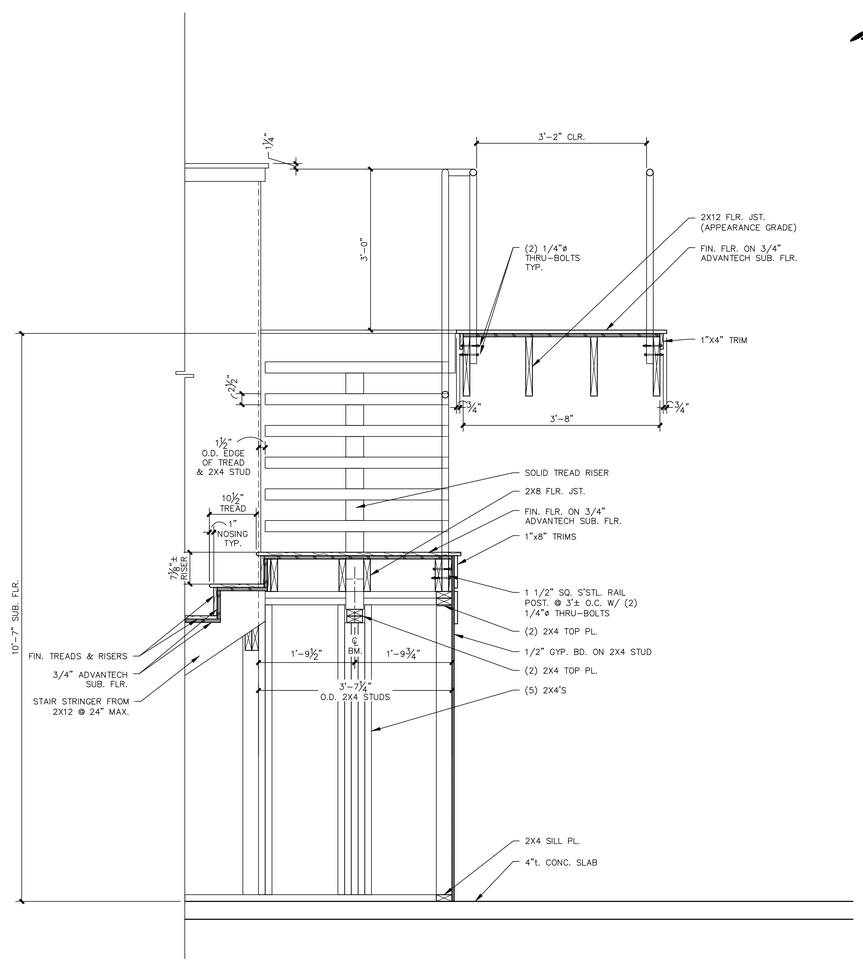

2 STAIR SECTION

3/4" = 1'-0"

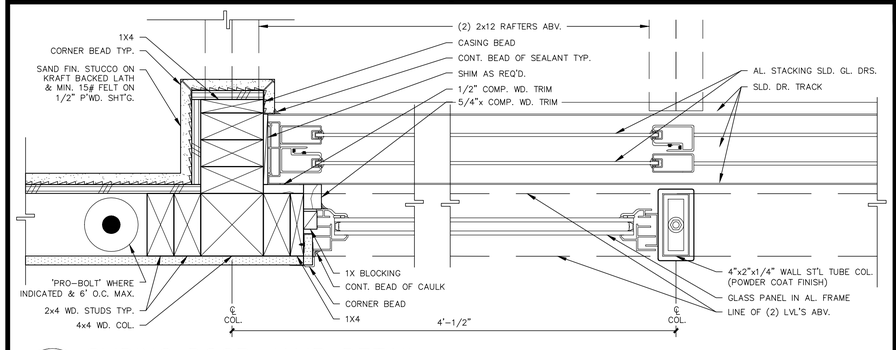

5 SLIDING DOOR JAMB DETAIL

3" = 1'-0"

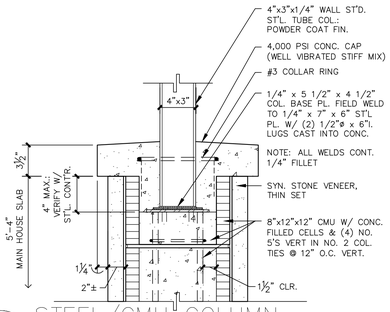

3 STEEL/CMU COLUMN

1-1/2" = 1'-0"

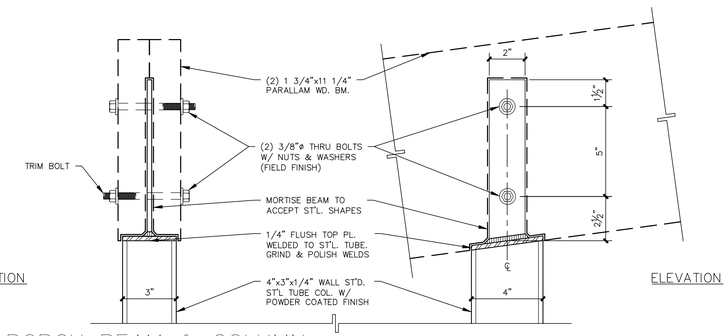

1 PORCH BEAM & COLUMN

3" = 1'-0"

Shibui Studios INC.

821 S.E. 16TH PLACE
OCALA, FLORIDA 34471
TEL. 352-368-3776
DATE: 5/1/2012

A NEW RESIDENCE FOR :

The Stockman Family
Lake Weir, Marion County, Florida

SHEET
A-9
OF A-11

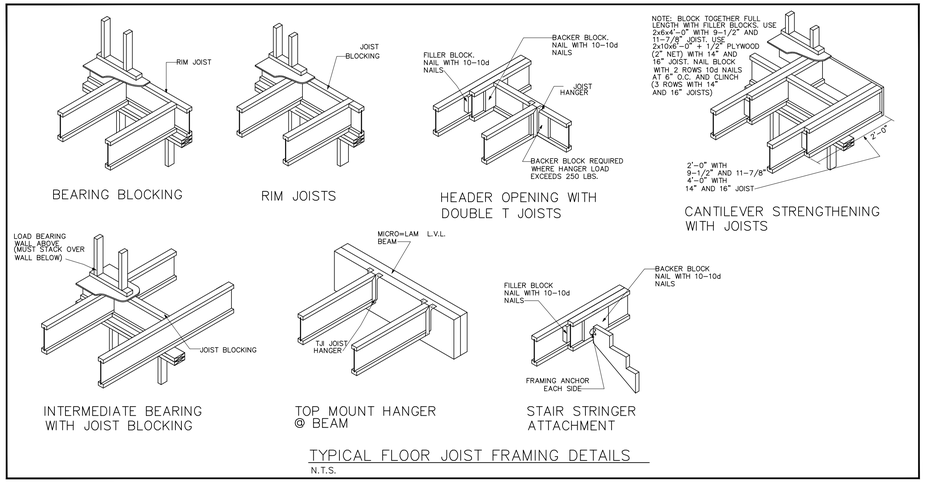

TYPICAL FLOOR JOIST FRAMING DETAILS
N.T.S.

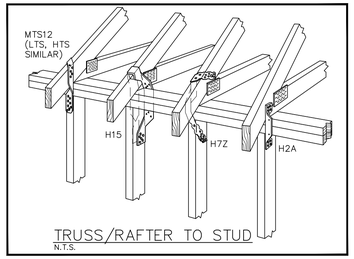

TRUSS/RAFTER TO STUD
N.T.S.

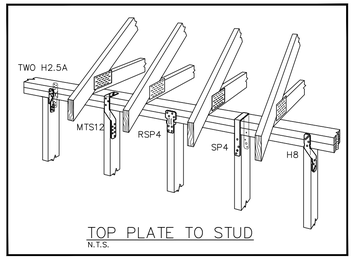

TOP PLATE TO STUD
N.T.S.

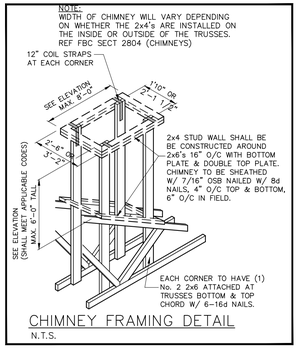

CHIMNEY FRAMING DETAIL
N.T.S.

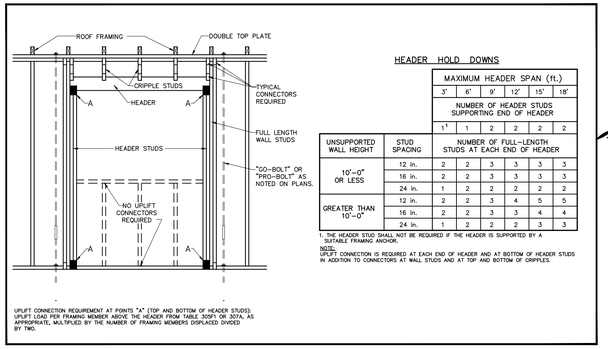

HEADER HOLD DOWNS

UNSUPPORTED WALL HEIGHT	STUD SPACING	MAXIMUM HEADER SPAN (ft.)					
		3'	6'	9'	12'	15'	18'
		NUMBER OF HEADER STUDS SUPPORTING END OF HEADER					
		1[1]	1	2	2	2	2
10'-0" OR LESS		NUMBER OF FULL-LENGTH STUDS AT EACH END OF HEADER					
	12 in.	2	2	3	3	3	3
	16 in.	2	2	3	3	3	3
	24 in.	1	2	2	2	2	2
GREATER THAN 10'-0"	12 in.	2	2	3	4	5	5
	16 in.	2	2	3	3	4	4
	24 in.	1	2	2	2	3	3

1 THE HEADER STUD SHALL NOT BE REQUIRED IF THE HEADER IS SUPPORTED BY A SUITABLE FRAMING ANCHOR.

NOTE:
UPLIFT CONNECTION IS REQUIRED AT EACH END OF HEADER AND AT BOTTOM OF HEADER STUDS IN ADDITION TO CONNECTORS AT WALL STUDS AND AT TOP AND BOTTOM OF CRIPPLES.

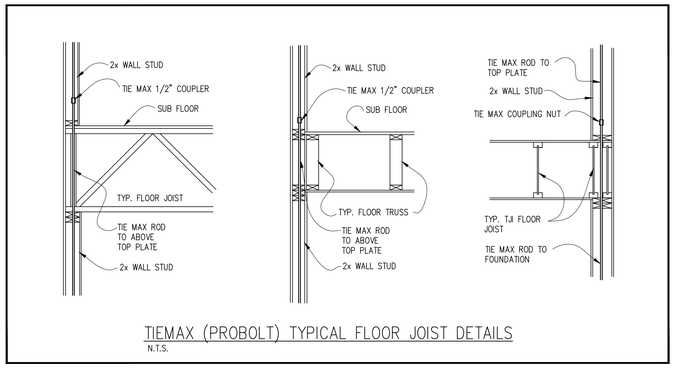

TIEMAX (PROBOLT) TYPICAL FLOOR JOIST DETAILS
N.T.S.

TIEMAX BOLT/STUD GENERAL SPACING				
SPACING	SYP – MAXIMUM TRUSS UPLIFT		SPF – MAXIMUM TRUSS UPLIFT	
(FT.)	(PLF)	24" O.C.	(PLF)	24" O.C.
4	950	1900	527	1054
6	595	1190	345	690
8	465	930	281	562

1. BASED ON MIN. #2 SYP OR #2 SPF TOP PLATE WITH MIN. 7/16" OSB SHEATHING ON ONE SIDE WITH CURRENT FBC NAILING PATTERNS.
2. ALLOWABLE SHEAR FOR TIE MAX IS 4161 LBS. AT UPLIFTS & CORRESPONDING SPACING.
3. REF. FLORIDA PRODUCT APPROVAL # FL1566.

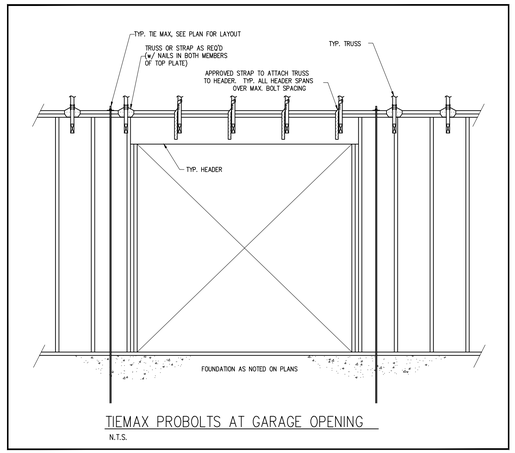

TIEMAX PROBOLTS AT GARAGE OPENING
N.T.S.

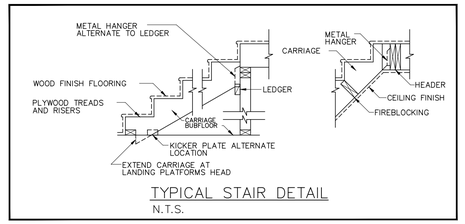

TYPICAL STAIR DETAIL
N.T.S.

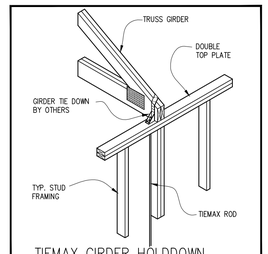

TIEMAX GIRDER HOLDDOWN
N.T.S.

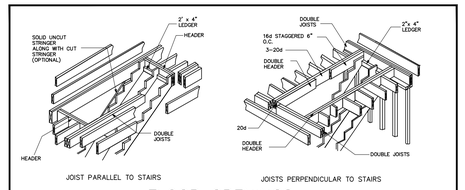

FLOOR OPENINGS
N.T.S.

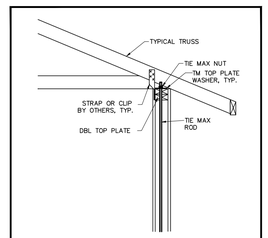

TYP. TOP PLATE CONNECTION
N.T.S.

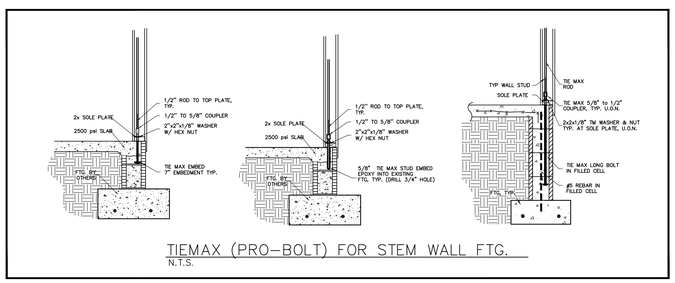

TIEMAX (PRO-BOLT) FOR STEM WALL FTG.
N.T.S.

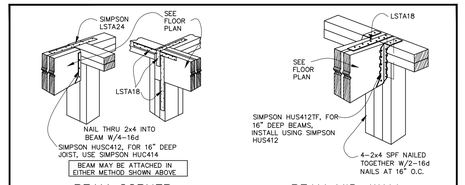

BEAM CORNER CONNECTION. DETAIL

BEAM MID-WALL CONNECTION DETAIL

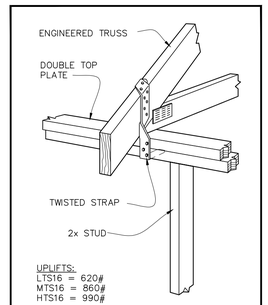

SIMPSON LTS, MTS, & HTS
N.T.S.

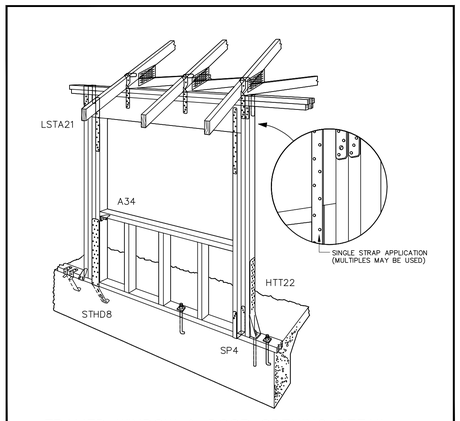

FRAMED WINDOW & DOOR OPENING DETAIL
N.T.S.
*SIMPSON STRONG-TIE CONNECTORS

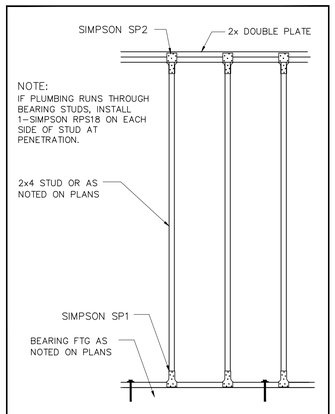

INTERIOR BEARING WALL DETAIL
N.T.S.

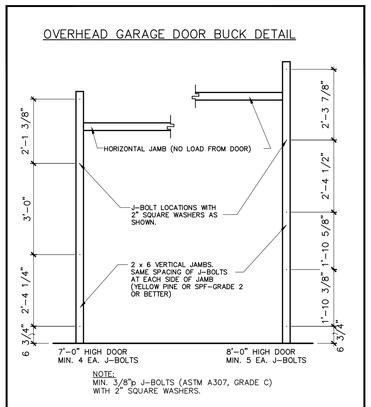

J-BOLT PLACEMENT FOR 7'-0" & 8'-0" DOORS
N.T.S.

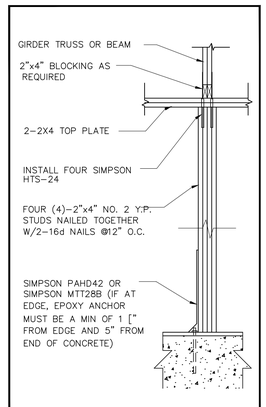

INTERIOR GIRDER DETAIL
N.T.S.

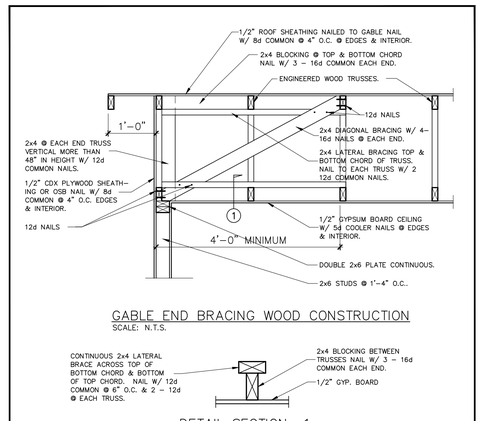

GABLE END BRACING WOOD CONSTRUCTION
SCALE: N.T.S.

DETAIL SECTION 1
SCALE: N.T.S.

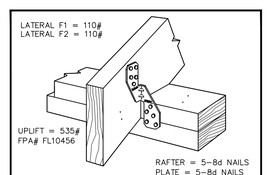

SIMPSON H2.5A CONN.

Shibui Studios INC.
821 S.E. 16TH PLACE
OCALA, FLORIDA 34471
TEL. 352-368-3776
DATE: 5/1/2012

A NEW RESIDENCE FOR :
The Stockman Family
Lake Weir, Marion County, Florida

SHEET
A-10
OF A-11